APPENDIX A

OPTIONS OPERATION

A.1 MODEL 2100/2110 HANDLER INTERFACE OPTION

Handler Interface options enable the Model 2100/2110 VideoBridge to operate with a mechanical parts handler. The option accepts a START signal to initiate measurements, provides a BUSY signal which may be used to arrest handler operation during test, and offers a contact closure output corresponding to one of thirteen preselected component bins (refer to Instruction Manual Section 2.7 for component sorting operation).

Three standard handler interface options are available. They are:

ESI Part No. 47895 -- For interfacing the Engineered Automation Auto-Sort Handler to the VideoBridge via the ESI Model 1453 Handler Adapter.

ESI Part No. 47896 -- For interfacing the Daymarc Type 147 and 149 handlers directly to the VideoBridge.

ESI Part No. 47897 -- For interfacing Browne handlers to the Video-Bridge.

Contact the factory for information concerning the use of other part handlers with the Model 2100 or 2110.

A.1.1 Hardware Included

Handler Interface Option 47895
- Handler Interface Circuit Assembly
- Instruction Sheet

Handler Interface Option 47896
- Handler interface Circuit Assembly
- Instruction Sheet

Handler Interface Option 47897
- Handler Interface Circuit Assembly
- Instruction Sheet

A.1.2 Installation

WARNING

TO AVOID PERSONAL INJURY FROM ELECTRIC SHOCK DO NOT REMOVE INSTRUMENT COVERS OR PERFORM ANY MAINTENANCE OTHER THAN DESCRIBED IN THIS MANUAL. INSTALLATION AND MAINTENANCE PROCEDURES DESCRIBED IN THIS MANUAL ARE TO BE PERFORMED BY QUALIFIED SERVICE PERSONNEL ONLY.

CAUTION

TO AVOID DAMAGE TO CIRCUITRY, TURN POWER OFF WHILE PLUGGING IN OR REMOVING CIRCUIT ASSEMBLIES.

The Handler Interface Assembly is plugged into the VideoBridge's motherboard (see Figure A-1).

Installation of the BNC-to-BNC cable assemblies and the Handler Interface cable assembly, for option part number 47895, are dependent upon the component handler being used. The BNC cables interconnect the instrument's HI and LO unknown terminals to the part handler's component contactors. The Handler Interface Cables make all logic connections between the instrument's rear panel OUTPUTS connector and the component handler.

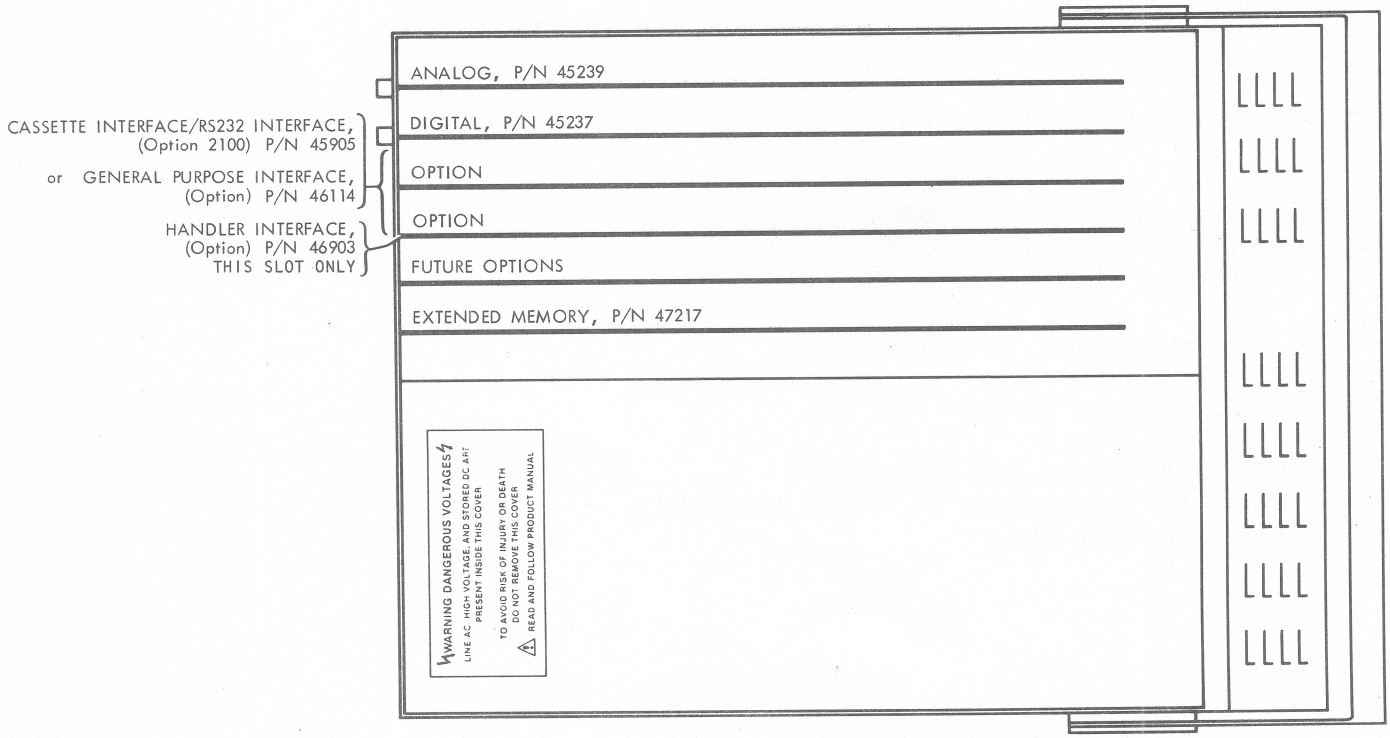

Figure A-1. Handler Interface Circuit Assembly Location

A.1.3 Operation

The Handler Interface option will only operate with instruments that have software revision 1.5 or greater. To determine which revision software is present in your instrument.

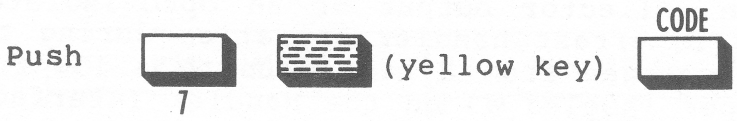

To assure proper Handler Interface option operation:

1. Set the instrument's bin limits and nominal value.*

2. Activate the Handler Interface option.

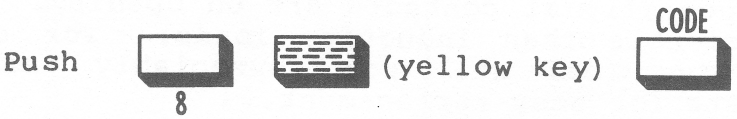

The VideoBridge will begin sorting components immediately.

As shown in the example above, the Handler Interface Option is activated using CODE 8. To deactivate this option either:

1. Temporarily ground Pin 21 of the Handler Interface rear panel connector. Grounding is accomplished by connecting Pin 21 to Pin 13 (System Ground) on the same connector.

2. Turning instrument power OFF then ON again. In this case, the nominal value, bin limits, and bin counters are zeroed.

---

* Refer to the Model 2100/2110 Operators manual, Section 2.7, for component sorting operation.

The Handler Interface provides the following functions:

1. START TEST - is the input to an opto-isolator. It requires a holding current of 10 to 80mA to initiate a measurement.

2. BUSY - is the open collector output of an opto-isolator. This signal can be used to arrest handler operation during test. The BUSY signal can be changed from a high true to a low true signal by cutting the jumper labeled W3 on the Handler Interface Circuit Card.

3. Output Relays - contact closures that are selected according to preset limits, see Component Sorting section of the instruction manual. (One relay is closed at a time.) The relays are rated at 100VDC, 250mA switching current, and 10 million operations. Higher currents can be switched with a possible reduction in operation life, especially if contacts arc on opening. Resistive loads are more desirable than inductive loads. For example, a 400mA, 15V, resistive load will not appreciably reduce life. Relays are on sockets for easy replacement.

4. 5V TTL (open collector) Outputs - are available at the rear panel OUTPUTS connector. They require the addition of a jumper wire in place of each output relay.

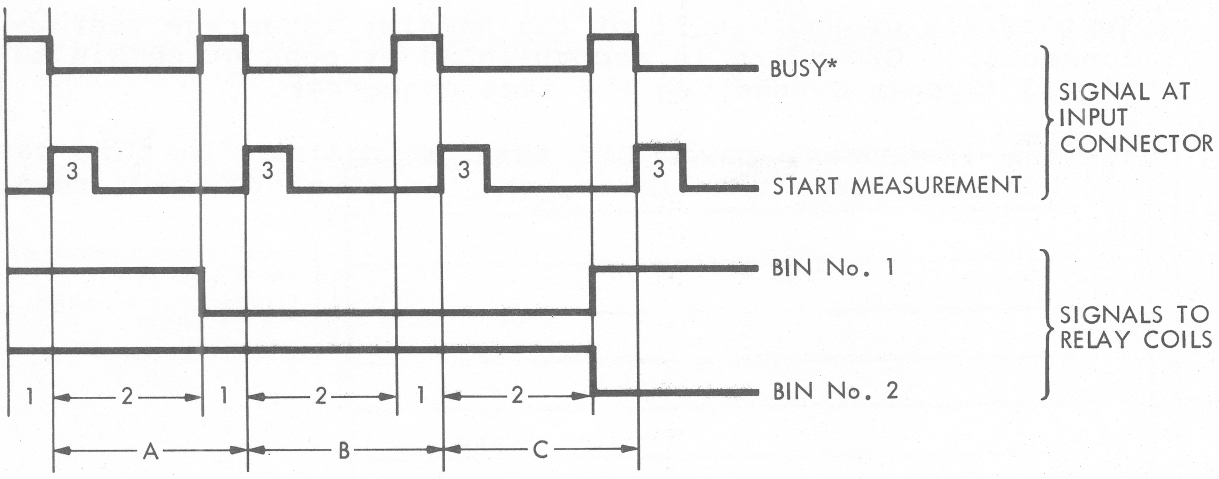

1. Handler Time -- User dependent.
2. Measurement Time -- Dependent on range and functions. See measurement speed section of the manual.
3. A measurement is initiated on the rising edge of the START signal.

A. First part was in bin No. 1 (low signal to relay coil).
B. Second part was also in bin No. 1 (low signal to relay coil).
C. Third part was in bin No. 2 (low signal to relay coil).
* Contact factory for special modifications.

NOTE: Outputs are latched until changed. Also note that the busy signal can be either high or low true depending on the setting of jumpers located on the Handler Interface circuit assembly.

Figure A-2. Handler Interface Option Signal Timing

All Handler Interface operations take place via the instrument's rear panel OUTPUTS connector. Table A-1 lists the functions for each pin of the OUTPUTS connector.

OUTPUTS CONNECTOR

PIN NUMBER	FUNCTION
1	COMMON
2	BIN Ø
3	BIN 1
4	BIN 2
5	BIN 3
6	BIN 4
7	BIN 5
8	BIN 6
9	BIN 7
1Ø	BIN 8
11	BIN 9
16	BIN 1Ø
17	BIN 11
15	BIN 12
12*	+5V (SYSTEM) OUT
13*	SYSTEM GROUND
14	START IN
18	BUSY OUT
19	BUSY COM
2Ø	START COM
21	KEYBOARD UNLOCK

*ESI recommends that Pin 12 (+5V OUT) and Pin 13 (SYSTEM GROUND) not be used. Noise introduced into the 21Ø0/211Ø through these connections may affect measurement results.

Table A-1. VideoBridge OUTPUTS Connector Wiring

NOTE: The Handler Interface cabling used with ESI's Model 296, 296V, and 41Ø will not be compatible with the Model 21Ø0/211Ø's connections since pin 21 is not connected in the Model 296 cable. Contact ESI factory for further details.

START COM/BUSY COM

The Handler Interface Option is shipped with the START COM (pin 2Ø) and BUSY COM (pin 19) lines tied, on the circuit card, to the COMMON (pin 1) side of the relay closures. If the binning operation requires relay COMMON (pin 1) be raised above ground potential, then START COM and BUSY COM must be disconnected from relay COMMON (pin 1) and connected to SYSTEM GROUND (pin 13). The following procedure tells how to do this.

STEP 1. Turn Instrument power OFF and remove its cover.

STEP 2. Remove the circuit card hold-downs and the Handler Interface circuit card (P/N 46903).

STEP 3. Locate and cut the connecting stripes labeled W4 and W5 in Figure A-3.

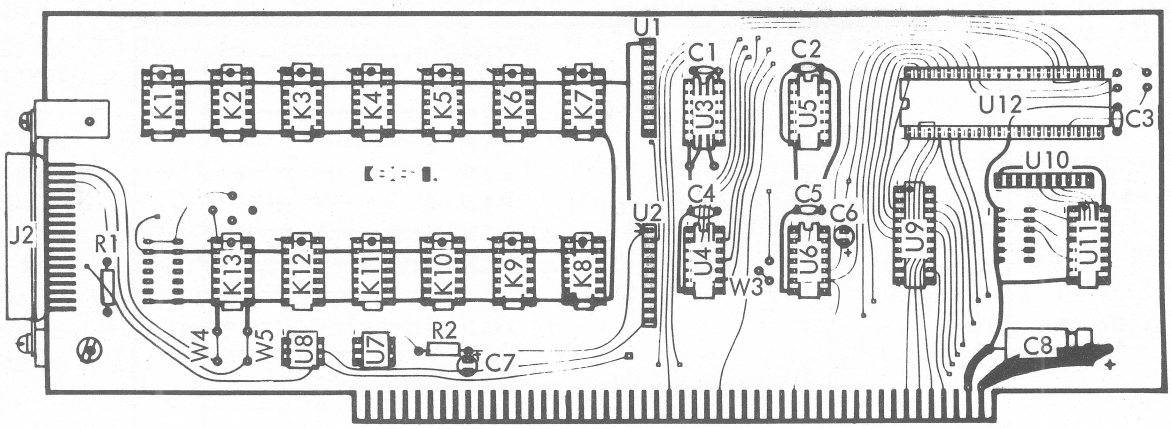

Figure A-3. Handler Interface Circuit Card

STEP 4. Add jumper wires to the rear panel connector. Connect START COM (pin 20) and BUSY COM (pin 19) to SYSTEM GROUND (pin 13).

STEP 5. Re-install the Handler Interface circuit card and instrument cover.

Connections to the Handler Interface Option should be made with a 36 contact receptacle that has a trapizoidal, polarized shell. Use Amphenol P/N 57-40360 or ESI P/N 15739.

ESI also has available the Model 1453 Handler Adapter. The 1453 connects to component handler bin actuators that require high currents or that have excessive electrical noise.

A.1.4 Calibration

The VideoBridge needs no adjustment, other than normal calibration, when a Handler Interface Option is installed. The Handler Interface Assembly contains no service adjustments.

A.2 MODEL 2100/2110 GENERAL PURPOSE INTERFACE BUS (GPIB) OPTION

A.2.1 Introduction

The GPIB Interface option allows the Model 2100/2110 VideoBridge to communicate on the bus structure defined by IEEE 488-1975 specifications. The bus itself is a passive structure. It is the active components on the interface option that enable the 2100/2110 to operate according to this universal standard. With the GPIB option installed, the 2100/2110 can be connected directly to the bus, and operated by a controller and the appropriate programming instructions. The instructions to and the data generated by the instrument are coded in ASCII code. Before continuing with a discussion of the GPIB hardware option and its programming structure, lets take a closer look at the requirements of the IEEE standard.

A.2.2 Bus Structure

The IEEE-488 bus is a set of sixteen signal lines that can be grouped functionally into three specifically dedicated busses.

1. 8 bidirectional data lines -- DIO 1 through DIO 8.
2. 3 interface signal lines -- DAV, NRFD, and NDAC
3. 5 general management lines -- ATN, EOI, IFC, REN, and SRQ.

Information is transferred along the bus in bit-parallel, byte-serial fashion by an asynchronous handshake. The handshake signals (interface signals DAV, NRFD, NDAC) guarantee the transfer of each byte of data from an addressed talker to all addressed listeners. This allows instruments with different data transfer rates to operate together on the bus as long as they conform to the handshake state diagrams defined in the IEEE standard.

Instruments connected to the bus are classified as either talkers, listeners, or controllers. A talker is capable of transmitting data on the data lines; there can be only one talker at a time to avoid confusion in message and data transfer. A listener is capable of responding to data received on the data lines; there can be more than one listener at a time. A controller designates which devices are to talk or listen and exercise other bus management functions; there can be only one controller at a time.

A device need not always be a talker or listener or controller, it may be idle part of the time. An instrument may alternate as a talker and a listener depending on whether it is generating data or receiving instructions. Figure A-4 is a typical system based on the IEEE-488 bus structure.

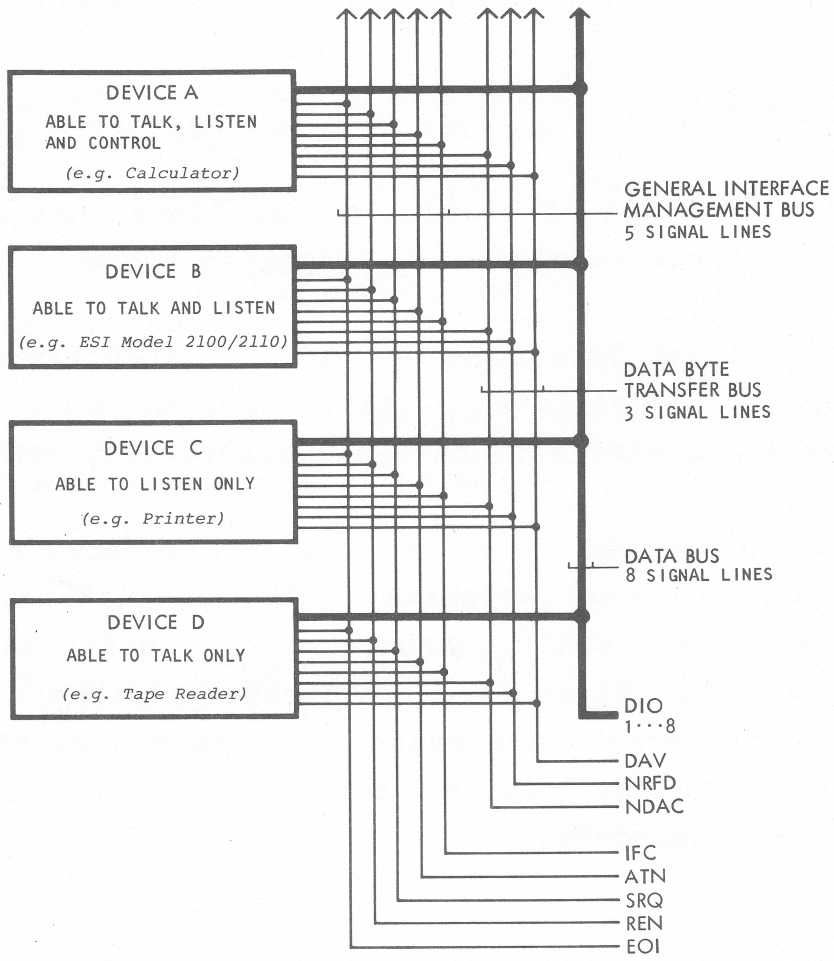

Figure A-4. A Typical IEEE-488 Bus Based System

A.2.3 Number of Devices

The IEEE-488 bus can handle up to 15 devices. More than 15 devices can be interfaced if they are not directly connected to the bus but are interfaced through another device. More than half of the main devices connected to the bus at any time must be powered up for the system to be operational.

A.2.4 Cable Length

The maximum cable length that can be used to connect a group of devices within one bus system is:

> 2 meters times the number of devices, or 20 meters, whichever is less.

Cables may be interconnected in either star or linear configuration, or in any combination of the two methods (see Figure A-5).

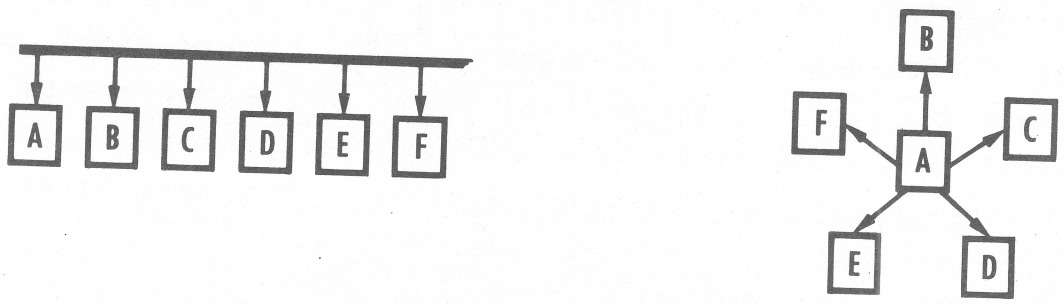

Figure A-5. IEEE-488 Bus Interconnection Configurations

A.2.5 Electrical Specifications

The relationship between the binary logic states and their voltage levels is as follows:

Logical State	Voltage Level
Ø	$\geq$ +2.ØV High is inactive state
1	$\leq$ +Ø.8V Low is active state

The high and low electrical states are based on standard TTL (transistor-transistor logic) levels where the power source does not exceed +5.25VDC and is referenced to logic ground.

A.2.6 Signal Lines

The IEEE-488 bus is divided by function into three separate busses: an eight-line data bus, a three line transfer bus, and a five-line management bus (see Figure A-5).

The data bus (signal lines DIO 1 through DIO 8) are used to convey data or device-dependent messages. DIO 1 represents the least significant bit in the transmitted byte; DIO 8 represents the most significant bit. One eight-byte word can be transmitted bidirectionally in byte-serial, bit parallel fashion. The data lines are considered active when their signal level is low.

The transfer bus is a three-wire handshake process that is executed between the talker and all designated listeners each time a byte is transferred over the data bus. This handshake process assures that new data is not placed on the data bus faster than the slowest listener can receive it. The three transfer bus lines and their functions are:

NRFD (Not Ready For Data) -- This signal line is low until all addressed listeners are ready to receive the next data byte. When all addressed listeners are ready, they release the NRFD line, the NRFD signal goes high, allowing the talker to place the next byte on the data line.

DAV (Data Valid) -- The DAV signal line is set low by the talker a short time after placing a valid byte on the data lines. This signal tells each listener to capture the byte presently on the data lines. DAV can not be set low until the NRFD signal goes high.

NDAC (Not Data Accepted) -- The NDAC signal line is set low by each addressed listener until they all have captured the byte currently on the data lines. When all listeners have captured the data byte, the NDAC signal goes high. With the NDAC signal high, the talker is able to remove the byte from the data lines and at that point set the DAV line high until the handshake cycle is repeated.

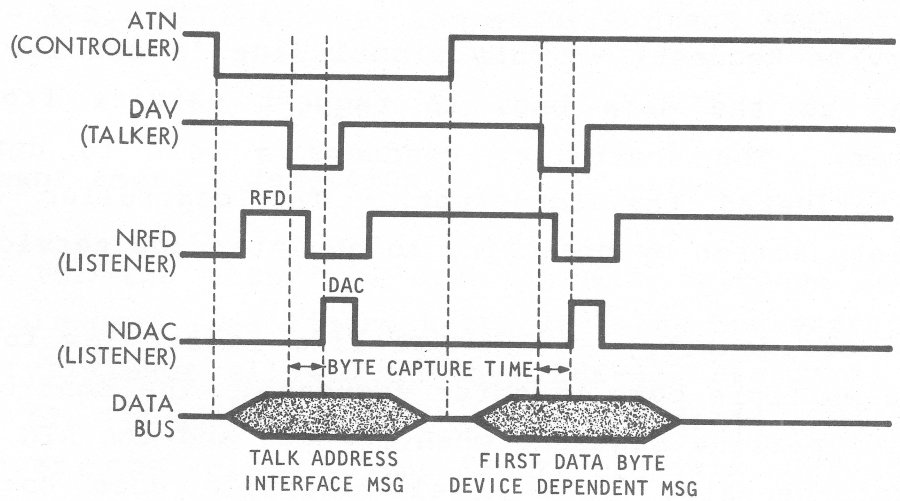

NOTE: Data Lines Are Active When Low

Figure A-6. A Typical Handshake Cycle

The group of signal lines used to control the orderly flow of information across the IEEE-488 data bus is called the management bus. These signal lines perform such important tasks as detecting interrupts, setting a device to remote control, and announcing the end of a message. The five management bus signals are:

ATN (Attention) -- This signal specifies how data on the bus are to be interpreted. It also specifies which devices along the bus must respond to the data. When ATN is set low, the data bus will convey addressed commands, talk addresses (MTA), listen addresses (MLA), secondary addresses, or universal commands. The codes corresponding to these various commands and addresses are defined in Appendix E of the IEEE-488 standard.

IFC (Interface Clear) -- This signal is set low, by the system controller, to initialize the interface functions of all devices connected to the data bus, i.e., set them to an inactive state, then return control to the system controller.

SRQ (Service Request) -- This signal line is set low, by a device connected to the data bus, to request service from the system controller. The controller conducts a poll to determine which device activated the interrupt. The controller can take the appropriate action by branching to an interrupt service routine.

EOI (End Or Identify) -- The EOI line is set low to indicate the end of a multiple byte transfer sequence. The controller executes a parallel polling sequence when the EOI and the ATN lines are set low simultaneously. The Model 2100/2110 does not support the parallel polling mode.

REN (Remote Enable) -- The system controller sets this line low to activate the remote mode in the instruments on the bus. When in the remote mode, the front panels of the instruments are disabled except for non-programmable functions.

A.2.7 Bus Connector

Instruments that connect to the IEEE-488 bus use of 24 contact, trapizoidal, polarized shell connector. The contact assignments for the connector are shown in Table A-2.

CONTACT	SIGNAL LINE	CONTACT	SIGNAL LINE
1	DIO 1	13	DIO 5
2	DIO 2	14	DIO 6
3	DIO 3	15	DIO 7
4	DIO 4	16	DIO 8
5	EOI	17	REN
6	DAV	18	Gnd (6)
7	NRFD	19	Gnd (7)
8	NDAC	20	Gnd (8)
9	IFC	21	Gnd (9)
10	SRQ	22	Gnd (10)
11	ATN	23	Gnd (11)
12	SHIELD	24	Gnd LOGIC

NOTE: Gnd (n) refers to the signal ground return of the referenced contact.

Table A-2. IEEE-488 Bus Connector Contact Assignments

A.2.8 Instrument Address Selection

Bus addresses for the 2100/2110 are set via switches on the GPIB interface circuit card (see Figure A-7). Primary bus addresses can be set over the full range allowed by the IEEE-488 standard: 32 to 62 (decimal) for LISTEN addresses and 64 to 94 (decimal) for TALK addresses. However, the values of the LISTEN and TALK addresses are not independent since they share the same switch setting (see Figure A-7). The address switches are set in binary fashion. The LISTEN address is achieved by the instrument's software automatically adding 32 to the switch setting. The TALK address is achieved by adding 64 to the switch setting.

The first five switch positions, starting with the top switch position, are used to set the LISTEN and TALK addresses. A switch position is activated when its left side is down, see Figure A-7. The decimal values for the first five switch positions are: 1, 2, 4, 8, and 16. In Figure A-7, switch positions 1 and 2 are activated providing: a value of 3, a LISTEN address of 35, and a TALK address of 67.

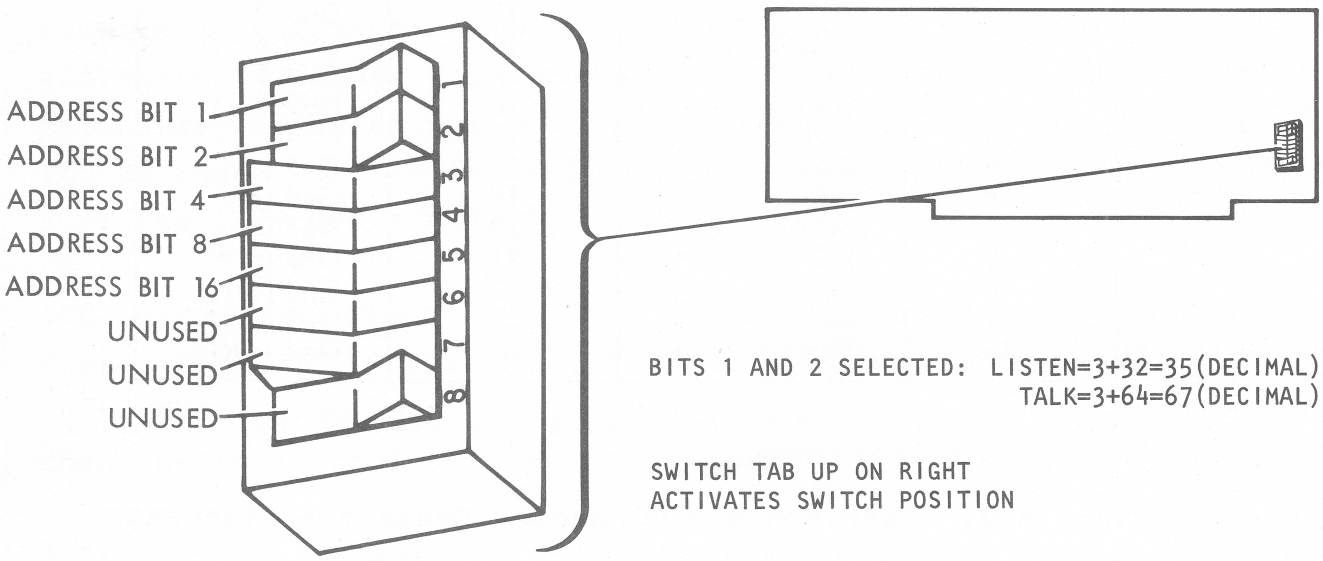

Figure A-7. GPIB Address Switches

A.2.9 GPIB Option Installation

WARNING

TO AVOID PERSONAL INJURY FROM ELECTRIC SHOCK DO NOT REMOVE INSTRUMENT COVERS OR PERFORM ANY MAINTENANCE OTHER THAN DESCRIBED IN THIS INSTRUCTION MANUAL. INSTALLATION AND MAINTENANCE PROCEDURES DESCRIBED HERE ARE TO BE PERFORMED BY QUALIFIED SERVICE PERSONNEL ONLY.

CAUTION

TO AVOID DAMAGE TO CIRCUITRY, TURN AC POWER OFF WHILE PLUGGING IN OR REMOVING CIRCUIT CARDS.

GPIB option installation involves plugging in the GPIB circuit card (ESI P/N 64114) and one or more Interrupt-Chain circuit cards (ESI P/N 48194). The GPIB circuit card is plugged into either slot shown in Figure A-8. Fill all empty circuit card slots with Interrupt-Chain circuit cards.

NOTE: The Interrupt-Chain circuit cards are installed with the arrow, on the card, pointing toward the front of the instrument.

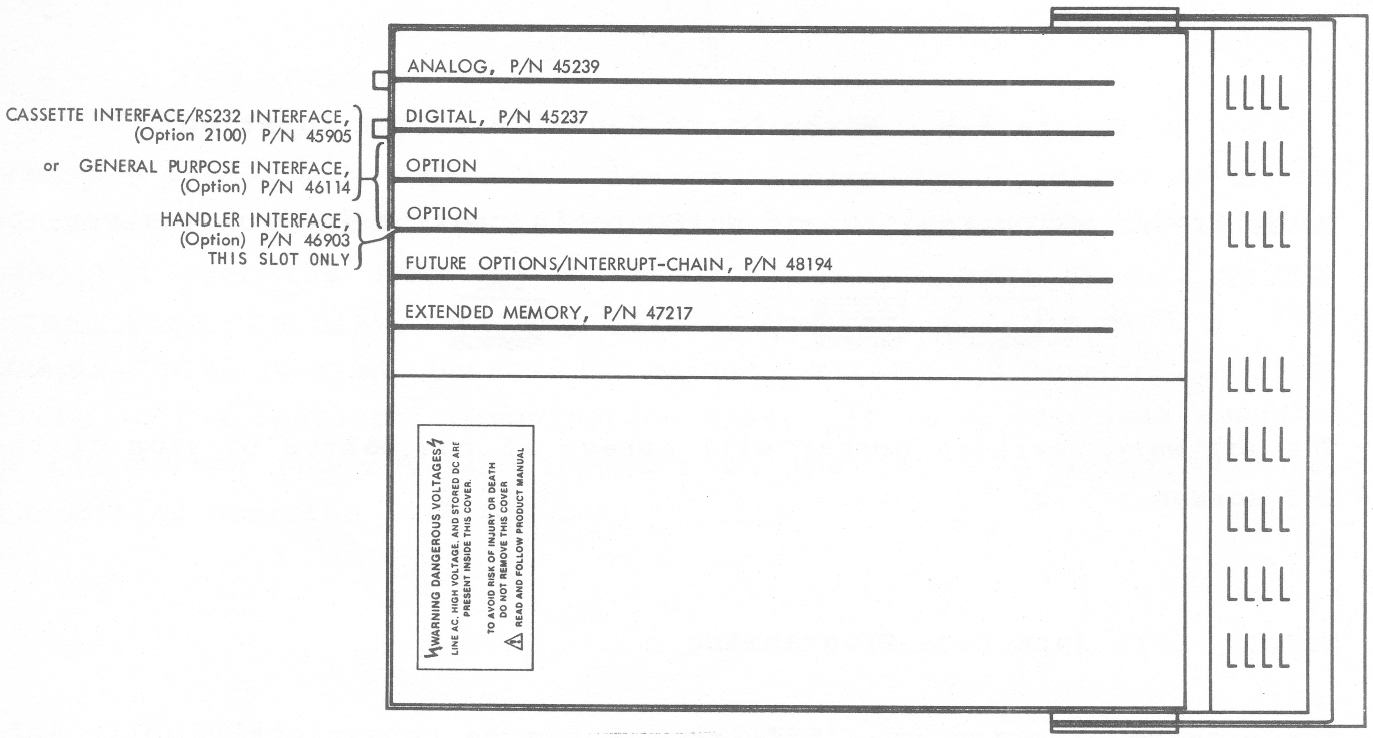

Figure A-8. GPIB Circuit Card Location

The GPIB Interface option will only work with instruments that have D revision letter, or greater, motherboards, and that have software revision 1.5 or greater. The motherboard revision letter is located on the bottom side of the motherboard in the location shown in Figure A-9.

NOTE: D revision motherboards do not allow use of the 2100/2110's external START feature. Contact ESI if you have a D revision motherboard and want to use the external START feature.

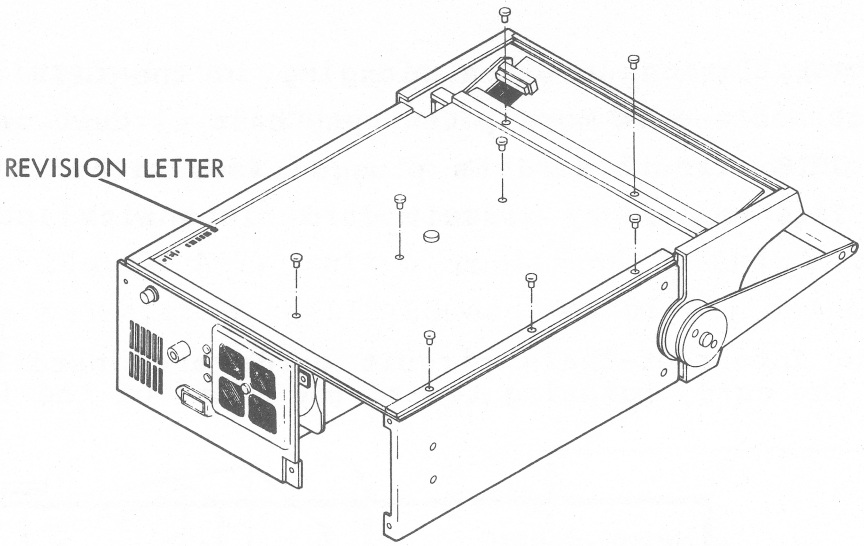

Figure A-9. Motherboard Revision Letter Location

To determine which revision of software is present in your instrument:

Push 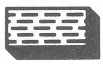 (yellow key)

The software revision number will appear at the bottom portion of the CRT screen.

A.2.1Ø GPIB Interface Programming

The process of using the IEEE-488 bus can be conveniently split into two phases:

Instrument Setup
Result Accumulation

A.2.10.1 Instrument Setup

After being addressed, the VideoBridge continuously checks for input from the IEEE-488 bus as it takes measurements or waits for input. If IEEE input is available, the instrument keyboard is disconnected and the IEEE bus is connected as the input device. Characters are received from the IEEE-488 bus as ASCII character strings and submitted to the 2100/2110 in the same manner as strings from the keyboard. In other words, transmitting the string:

5 -5 1 BIN# <CR> <LF>

over the IEEE-488 bus will be like performing the same operation at the 2100/2110 keyboard. The key to programming is that the string submitted over the IEEE-488 bus must be exactly what appears on the screen when the 2100/2110 keys are pushed (see Table A-3). For example, when the mV button is pushed, MILLIVOLTS appears on the screen in the operator communication area. It is always what appears on the screen and not what appears on the keyboard which must be transmitted over the IEEE-488 bus.

Table A-3. Model 2100/2110 Remote Setup Dictionary

KEYBOARD COMMANDS	IEEE-488 PROGRAMMING COMMANDS	DESCRIPTION
MEASUREMENT CONTROLS		
SGL	SINGLE	Single Measurement Mode
CONT	CONTINUOUS	Continuous Measurement Mode
SER	SERIES	Series Equivalent Circuit
PRL	PARALLEL	Parallel Equivalent Circuit
CAL	CALIBRATE	Zero Correction (test leads/fixture)
HOLD	HOLD	Range Hold
AUTO	AUTO	Autorange
DISPLAY CONTROLS		
XCHG	EXCHANGE	Function Exchange (on CRT)
STAT	STATUS	Status (limits) Display
SORT	SORT	Enter Sorting Mode
DEV	DEVIATION	Deviation Display (top function only)
DIR	DIRECT	Direct Display (normal operation)
IMPEDANCE FUNCTIONS		
Q	Q	Quality Factor Measurement Function
D	D	Dissipation Factor Measurement Function
G/R	G/R	Conductance (G)/Resistance (R) Measurement Function
C	C	Capacitance Measurement Function
L	L	Inductance Measurement Function
Y/Z	Y/Z	Admittance (Y)/Impedance (Z) Measurement Function
B/X	B/X	Susceptance (B)/Reactance (X) Measurement Function
DEL	RUB OUT	Delete the last character entered
ENTER	SPACE BAR	Spacing device when programming
CASSETTE FUNCTIONS		
LOAD	LOAD-FILE	Load Programs via Cassette Tape
SAVE	SAVE-FILE	Save Programs On Cassette Tape
DEVIATION AND LIMITS FUNCTIONS		
BIN#	BIN#	Bin Number Entry
MINOR	MINOR	Minor Number or Maximum/Minimum Reject Entry
%	%MODE	Percent (deviation) Mode
ABS	ABSMODE	Absolute (deviation) Mode
NOM	NOMINAL	Nominal Value Entry
TEST FREQUENCY AND LEVEL		
Hz	HZ	Test Frequency Entry
mV	MILLIVOLTS	Test Voltage (signal level) Entry
mA	MILLIAMPS	Test Current (signal level) Entry

Table A-3. Model 2100/2110 Remote Setup Dictionary (Continued)

KEYBOARD COMMANDS	IEEE-488 PROGRAMMING COMMANDS	DESCRIPTION
MEASUREMENT TIME		
SETL	MS-SETTLING-TIME	Settling Time Entry
I.T.	INTEGRATION-TIME	Integration Time Entry
AVG	SAMPLES-AVERAGED	Average Measurements Entry
FAST	FAST	Fast Measurement Speed
MED	MEDIUM	Medium Measurement Speed
SLOW	SLOW	Slow Measurement Speed
NUMERICAL PREFIXES		
m	MILLI	Milli 10^{-3}
k	KILO	Kilo 10^{3}
M	MEGA	Mega 10^{6}
p	PICO	Pico 10^{-12}
n	NANO	Nano 10^{-9}
µ	MICRO	Micro 10^{-6}
SPECIAL FUNCTIONS		
CODE	CODE	Extra Functions Entry
	REMOTE[	Temporarily Disconnect the Keyboard and Startswitch (start of setup)
	]	Re-activate the Keyboard and Start-switch at the end of setup unless the command was part of the setup
	LOCK	Measurement Results into IEEE Buffer
	REMOTEON	No Measurement Output
	REMOTEOFF	Keyboard Lock Out
	LOCK	Re-activate the Keyboard
	UNLOCK	Display Lock Out
	SCREENOFF	Enable CRT Display
	SCREENON	

The IEEE-488 input is not echoed on the screen and carriage returns <CR> are necessary, line feeds <LF> are optional. With the exception of "REMOTE[" and "]", multiple commands can appear on the same line.

To allow fastest setup times and also to ensure that the IEEE-488 input will not be disturbed by keyboard input between successive lines of setup information, the first character output (instruction in the program) should be:

"REMOTE["

which temporarily disconnects the keyboard and external START switch. This character must sit on a line by itself followed by a carriage return before additional input will be accepted by the 2100/2110.

The "]" character is issued at the end of the setup phase to restore the instrument to its measurement loop and make the keyboard active again. "]" also issues a service request which will indicate if any errors occurred during the measurement. The setup program must explicitly lock the keyboard out if that is desired. This may be done with the LOCK command. After the desired measurements have been made, the instrument can be UNLOCKed.

If an error occurs as the 2100/2110 processes the setup information, it will be indicated in the status byte transmitted by the service request generated by "]" at the end of the setup phase. After the controller has set up the 2100/2110, it must perform a serial poll at the instrument's bus address and make sure no errors have occurred. In the case of multiple errors, only the last error will be indicated. Example:

```
UNDEFINED ARGH!
```

In this example, "ARGH!" was unknown when the 2100/2110's dictionary was searched. It may also be helpful too if the controller prints each string on its operator console as it transmits it to the 2100/2110, and then prints the error string received from the 2100/2110. This will greatly facilitate the development of setup programs.

Example Setup:

```
REMOTE[
  REMOTEON              % MEASUREMENT RESULTS INTO IEEE BUFFER
  SCREENOFF             % LOCK OUT CRT DISPLAY
  LOCK                  % LOCK OUT THE KEYBOARD
  1000 HZ               % SET FREQUENCY
  FAST                  % SET AVERAGES, INTEGRATION TIME AND
                        % SETTLING TIME
  C D                   % MEASUREMENT FUNCTIONS
  SERIES                % SERIES EQUIVALENT CIRCUIT
  2 CODE                % SET ALL BINS TO ZERO
  1 -1 1 BIN#
  5 -5 2 BIN#
  10 -10 3 BIN#
  20 -20 4 BIN#         % SET UP BIN VALUES
  100 NANO NOMINAL      % NOMINAL VALUE
  .0005 MINOR           % SET MINOR REJECT VALUE
]                       % END OF SETUP
                        % THIS INITIATES A SERVICE REQUEST
                        % WITH STATUS OF THE SETUP
  SINGLE                % REQUEST FIRST READING AND
                        % WAIT FOR SERVICE REQUEST
```

SETUP COMMENTS

The percent sign (%) is used to separate comments from the information which is to be acted upon by the 2100/2110. Therefore, comments can be included with the setup information as shown in the preceeding example.

SEPARATORS

All numbers and words in the setup strings must be separated by either SPACES, TABS, or be followed by a CARRIAGE RETURN.

LINE TERMINATION

Line feeds are accepted and discarded. A carriage return is all that is required.

UPPER AND LOWER CASE

Lower case characters are equivalent to upper case characters when naming definitions in the dictionary. When in doubt, use upper case characters. Comments can be either upper or lower case characters.

ERRORS DURING SETUP

Any errors occurring during the remote setup will result in an english description of the error and, in the case of undefined words, the offending word. This information becomes available after the "]" is digested by the instrument. If all went well the string "NO ERRORS" will be transmitted. In the case of multiple errors only the last will be transmitted.

DATA OVERFLOW

Data flowing into the GPIB Interface option is placed in an intermediate queue, on an interrupt basis, allowing up to two-hundred characters of input to back-up before overflow occurs. This technique allows full lines of data to be transmitted without concern about lost data.

However, should the serial device fail to interpret control S as a request to terminate transmission the input queue will overrun and information will be lost. At this point, the GPIB will not respond to additional input. The 2100/2110 must remove data from the queue until it is no more than one-quarter full, then it can accept data again.

Data overflow will result in a hung bus and should be considered carefully if several instruments require prompt service. One may always construct the setup in multiple phases of less than 256 characters each and then wait for the service-request to indicate phase completion before transmission of the next phase.

SETUP CAUTIONS

During the setup phase it is convenient to issue a STATUS command so the process of bin setup is visible on the screen. Remember that when the setup is complete STATUS must be issued again to put the instrument in the measurement mode. Otherwise the SINGLE measurement commands will not result in the transmission of measurement data to the remote device.

In summary, the procedure for remote setup is:

STEP 1. Sit down with a pad of paper and write what appears on the screen as you push the keys and set up the instrument manually.

STEP 2. Add "REMOTE[" to the start of this list of words "]" to the end. Be sure that these two words each sit on a separate line apart from the other words.

STEP 3. Write a program in the language of the computer which will be setting up the 2100/2110 which outputs this list of words to the remote programming device.

STEP 4. After the list has been transmitted, request an output from the 2100/2110 (take one reading) and make certain no errors are encountered.

A.2.10.2 Result Accumulation

Special Display Words

Here, the word display is used to indicate some form of output. One form is the top and bottom display on the instrument screen - the one formed in large characters. Another is the more standard floating point numbers which are output to the remote device after a SINGLE command has been remotely issued. The conversion of an inner floating point representation to a string of characters suitable for display takes considerable processing time. The following words were devised so the time between measurements can be as brief as possible.

SCREENON/SCREENOFF

This pair of words enables and disables the large video display on the screen of the 2100/2110. When the instrument is not being monitored on site and the measurement results are being transmitted by way of the remote output, SCREENOFF will greatly increase measurement speed.

REMOTEON/REMOTEOFF

REMOTEON must be part of the setup information before the results of a measurement are transmitted to the remote device which last transmitted information to the 2100/2110. The output string looks like this:

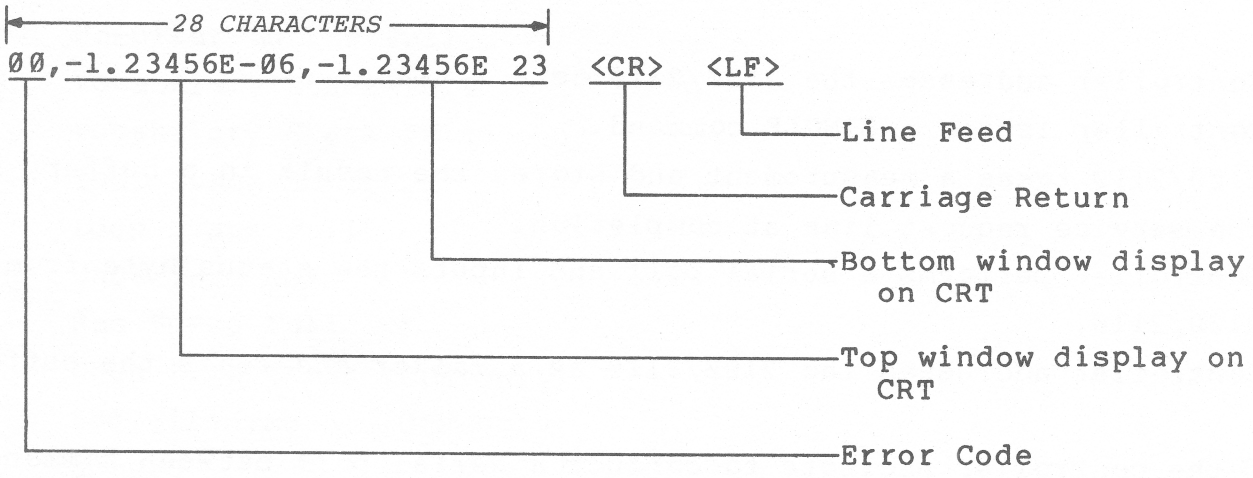

The field sizes are fixed so FORTRAN programs can use fixed field format statements to receive the input.

LOCK/UNLOCK

LOCK is issued in the setup phase to lock out the keyboard of the instrument during remote operation. UNLOCK can be issued at the termination of a run to restore control, or the keyboard can be unlocked by using pin 21 of the Handler Interface circuit card in case one wishes to override the remote device.

REMOTE[/]

REMOTE[disables the 2100/2110 keyboard and directs error messages normally appearing in the bottom reverse video line of the 2100/2110 to the remote device. It also disables the instrument from taking measurements during the setup phase. It is absolutely necessary that this word appear on a line by itself!

] restores the instrument to measurement mode and, if the setup didn't lock out the keyboard, re-enables the keyboard, and generally undoes any change made by REMOTE[. This word also must appear on a line by itself!

The protocol for taking measurements is:

-Controller addresses the 2100/2110 as a listener.
-Controller issues a SINGLE command.
-2100/2110 takes a measurement and stores the result in a buffer, sets the service request line at completion.
-Controller performs a serial poll and inputs the status byte from the 2100/2110.
-Controller addresses the 2100/2110 as a talker and reads the buffer.

If the controller neglects to conduct a serial poll between commanding measurements, the previous measurement will be written over.

The IEEE-488 protocol does not support the use of continuous mode measurement. The controller must initiate each measurement by the use of a SINGLE command. If continuous is used, then no guarantee is made that the 2100/2110 is not writing to the middle of the buffer at the same time that the controller is reading the buffer.

Error code assignments for 2100/2110.

00	No error
01	Unused
02	Stack Empty
03	Stack Full
04	Syntax Error
05	Dictionary Full
06	Compiler Buffer Full
07	Vocabulary Stack Full
08	Vocabulary Stack Full
09	Loop Stack Empty
10	Loop Stack Full
11	Undefined Word
12	Ram Space Full
13	Open File Error (CPM only)
14	Bad Filename (CPM only)
15	Unused
16	Block Error (Tape I/O)
17	Unused
18	End of File Encountered
19	Unused
20	Floating Point Overflow
21	Floating Point Underflow
22	Float -> Fix error - Number too big
23	Unused
24	Unused
25	Float -> Double Precision Fix error - number too big
26	Unused
27	Input overloaded
28	Can't supply volts
29	Can't supply current

A.2.11 Calibration

The 2100/2110 needs no adjustment, other than normal calibration, when the GPIB option is installed. The GPIB Interface circuit assembly contains no service adjustments.

WARNING

TO AVOID PERSONAL INJURY FROM ELECTRIC SHOCK DO NOT REMOVE INSTRUMENT COVERS OR PERFORM ANY MAINTENANCE OTHER THAN DESCRIBED IN THIS INSTRUCTION SHEET. INSTALLATION AND MAINTENANCE PROCEDURES DESCRIBED IN THIS INSTRUCTION SHEET ARE TO BE PERFORMED BY QUALIFIED SERVICE PERSONNEL ONLY.

A.3 RS-232C INTERFACE OPTION

The RS-232C Interface option is used to interface the 2100/2110 VideoBridge to peripheral equipment; i.e. video display terminals, keyboards, printers, etc. With this option installed, the 2100/2110 can interface with:

0-20mA Current Loop Systems
RS-232C Systems.

A.3.1 0-20mA Current Loop Systems

Constant current loops were originally used in devices like the teletype. As a result, some of todays faster terminals also use current loops. The RS-232C option provides a communication link to these types of terminals.

The RS-232C option's rear panel output connector has pins 17 and 24 reserved for the + and - sides of the RECEIVER input to the 2100/2110, while connector pins 23 and 25 are reserved for the + and - sides of the TRANSMIT output from the 2100/2110. Data are transmitted by opening (SPACE or no current flow) and closing (MARKing) the current loop.

NOTE: Teletypes are not supported by this option because they need two STOP bits. However, the option will support devices that operate at 110 baud and that will accept 1 STOP bit.

A.3.2 RS-232C Systems

The RS-232C standard defines electrical, logical, and mechanical specification for the transmission of bit serial information. The VideoBridge's RS-232C option supports two bidirectional communication channels (A and B) that are used to communicate instrument setup and measurement information.

NOTE: ESI recommends using RS-232C Channel B only. Channel A is reserved for future programming features.

A.3.2.1 Channel A

Serial Channel A is an input channel only. Input characters are echoed back to the terminal for display. Channel A allows the instrument to be set up via an external terminal. Keyboard control is transferred from the VideoBridge to the external terminal by special function CODE 4. Transfer of control is signaled by the prompt "Ø>" appearing on the terminal's screen. All terminal entries are echoed back and displayed on the terminal's screen. See Section A.3.9 for programming instrument setup instructions.

A.3.2.2 Channel B

Channel B is used in two ways:

1. As a serial output for driving a printer.

2. As a means to provide remote programming. Programming instrument setups is very similar to that used on the IEEE-488 Interface Bus.

Data flowing into Channel B is placed in an intermediate queue on an interrupt basis. It allows up to two-hundred characters of input before overflow occurs and it enables full lines of data to be transmitted without concern about lost data.

NOTE: Entries made through channel B are not echoed back for display.

The Channel B output buffer transmits three pieces of data when the remote display mode is activated (by including the command REMOTEON as part of the setup program) and the measurement is completed.

1. A two digit error code.

2. Measurement from the top window of the instrument.

3. Measurement from the bottom window of the instrument.

See Section A.3.9 for measurement output information.

A.3.2.2.1 RS-232C Signal Flow

The simplest use of the RS-232C bus requires three lines.

RS-232C OPTION CONNECTOR PIN		SIGNAL NAME
Channel A	Channel B	
2	14	Receive Data
3	16	Transmit Data
7	7	Signal Ground

As shown in Figure A-10, the terminal's transmit line points toward pin 2 of the 2100/2110, and pin 3, the 2100/2110 transmit line, points toward the data terminal. When the 2100/2110 is to act as a terminal, the meanings and direction of signal flow are interchanged.

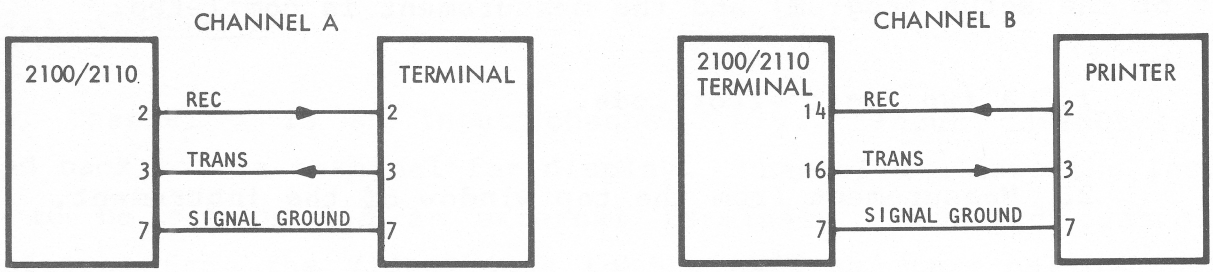

Figure A-10. RS-232C Signal Flow

Because Channel A is normally used to connect to a local terminal, it only uses the three signal lines shown in Figure A-10. This provides for very simple interconnection. However, some RS-232C terminals require additional signals to those mentioned above. They may require that the Data Set Ready (pin 6) or the Clear to Send (pin 5) or both be set high (true) to indicate readiness to transmit information. In such cases, connect pins 5 and 6 to pin 4. Pin 4 is the Request to Send line and is set high by the terminal RS-232C option connector to indicate when it is ready to transmit information. By connecting this signal to pins 5 and 6, conditions for data transmission are met.

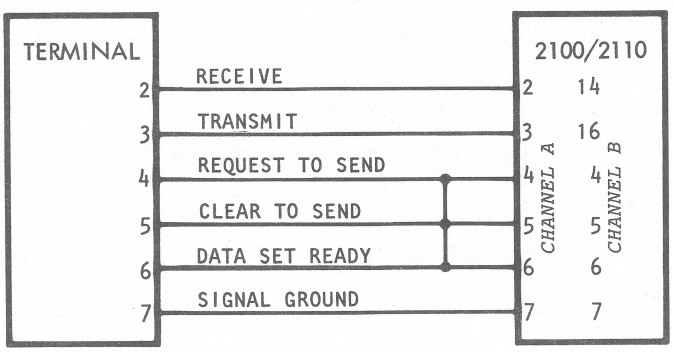

Figure A-11. RS-232C with Request to Send, Clear to Send, and Data Set Ready.

NOTE: Occasionally, pin 20 (Data Terminal Ready) is used in place of pin 4 (Request To Send). Therefore, if connecting to pin 4 doesn't work, try connecting pins 5 and 6 to pin 20.

A.3.3 Cable Length

Cable length for RS-232C transmission will vary according to the baud rates selected. For maximum transmission rate of 9600 baud, a cable length of less than 100 feet must be used. The capacitance of the cable must be less than 5000 picofarads. The essential parameter is the signal risetime which must be less than 1/2 the bit width so that the sampled signal will be correct. Each time the baud rate is halved the allowable risetime doubles and the acceptable cable capacitance doubles. Therefore, 4800 baud can be transmitted over 200 feet; 2400 baud will work at 400 feet.

A.3.4 Signal Levels

Tables A-4 and A-5 show the signal levels specified by the RS-232C standard. The signal states shown in Table A-4 apply to the Receive and Transmit signals. Table A-5 applies to all control inputs.

NOTATION	SIGNAL STATE	
	POSITIVE	NEGATIVE
BINARY STATE SIGNAL CONDITION FUNCTION VOLTAGE LEVEL	0 SPACING ON +3V to +25V	1 MARKING OFF -3V to -25V

Table A-4. RS-232C Receive and Transmit Signal Levels

NOTATION	SIGNAL STATE	
	POSITIVE	NEGATIVE
BINARY STATE SIGNAL CONDITION VOLTAGE LEVEL	1 TRUE +3V to +25V	0 FALSE -3V to -25V

Table A-5. RS-232C Control Signal Levels

A.3.5 Bus Connector

The pin assignments used by the RS-232C option are as follows:

CONNECTOR PIN	SIGNAL LINE
1	Chassis Ground
2	Transmitted Data from terminal (RS-232C IN)
3	Received Data to terminal (RS-232C OUT)
4	Request to Send (Channel A)
5	Clear to Send (Channel A)
7	Signal Ground
13	Clear to Send (Channel B)
14	Receive Data (Channel B)
16	Transmit Data (Channel B)
17	+ Current Loop Transmit
20	Data Terminal Ready (Channel A)
23	+ Current Loop Receive
24	- Current Loop Transmit
25	- Current Loop Receive

Table A-6. RS-232C Pin Assignments

When connecting to the RS-232C option use a 36-contact, trapezoidal, polarized-shell connector; ESI P/N 26430, Manufacturer P/N CINCH DB-25P.

A.3.6 Selecting the Baud Rate

Baud rate is equivalent to bits per second. The RS-232C Interface has the following baud rate selections:

150	1200	9600
300	2400	
600	4800	

The RS-232C Interface circuit card is shipped with channels A and B wired for 9600 baud.

To select another baud rate:

1. Cut the circuit card stripe labeled W1, for Channel A, and/or W3, for Channel B, see Figure A-12.

2. Jumper between AXMIT and the desired baud rate for Channel A and/or between RECXMITB and the desired baud rate for Channel B.

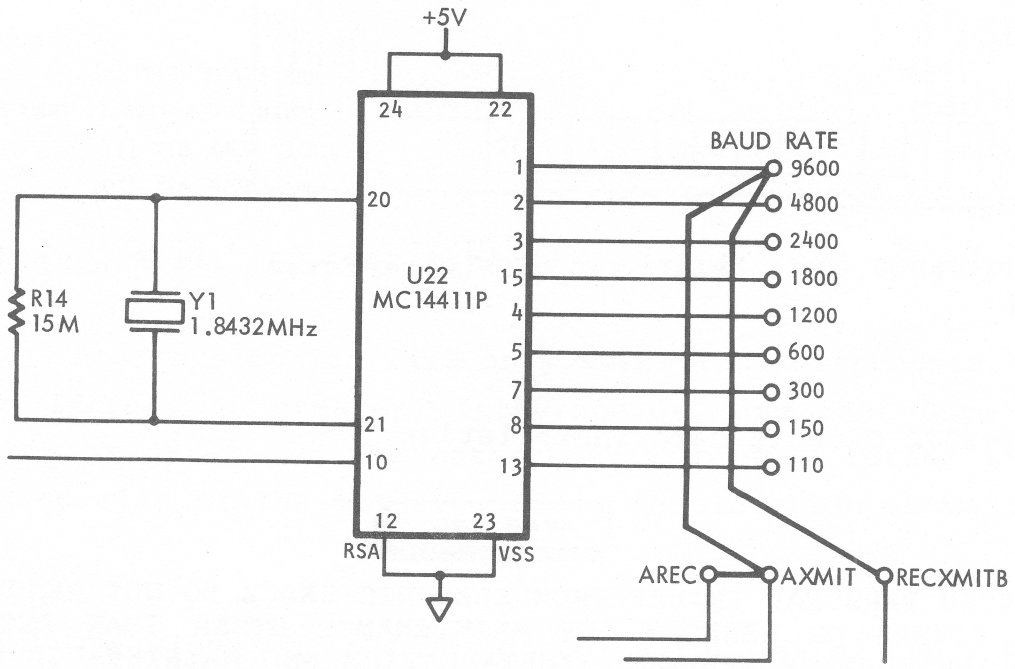

Figure A-12. Selecting the Baud Rate

The RS-232C option also provides independent baud rate clocks for the Channel A Transmitter and Receiver.

To select different Channel A Transmit and Receive baud rates:

1. Cut the circuit card stripes labeled W1 and W2 in Figure A-12.

2. Jumper between AXMIT and the desired Transmit baud rate.

3. Jumper between AREC and the desired Receiver baud rate.

NOTE: Channel B receive and transmit baud rates can not be set independently.

A.3.7 Data Format

The RS-232C option transmits and receives 7-bit ASCII with one Start bit and one Stop bit. There are no parity generation or checking bits.

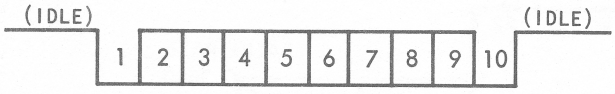

ONE START BIT (1)
SEVEN DATA BITS (2 THRU 8)
ONE NULL BIT (9)
ONE STOP BIT (10)

Figure A-13. Data Format

A.3.8 RS-232C Circuit Card Installation

WARNING

TO AVOID PERSONAL INJURY FROM ELECTRIC SHOCK DO NOT REMOVE INSTRUMENT COVERS OR PERFORM ANY MAINTENANCE OTHER THAN DESCRIBED IN THIS INSTRUCTION MANUAL. INSTALLATION AND MAINTENANCE PROCEDURES DESCRIBED HERE ARE TO BE PERFORMED BY QUALIFIED SERVICE PERSONNEL ONLY.

CAUTION

TO AVOID DAMAGE TO THE CIRCUITRY, TURN POWER OFF WHILE PLUGGING IN OR REMOVING CIRCUIT CARDS.

RS-232C option installation involves plugging in the RS-232C Interface circuit card (ESI P/N 4590Ø5) and one or more Interrupt-Chain circuit cards (ESI P/N 48194). The RS-232C circuit card is plugged into either slot shown in Figure A-14. Fill all empty circuit card slots with Interrupt-Chain circuit cards.

NOTE: The Interrupt-Chain circuit cards are installed with the arrow, on the card, pointing toward the front of the instrument.

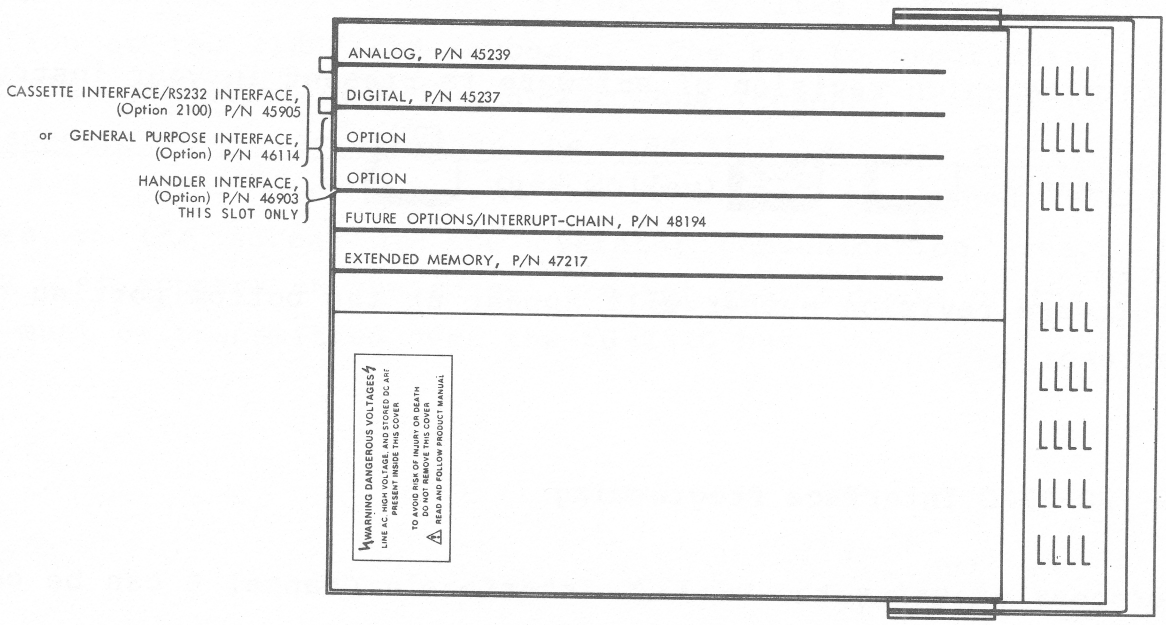

Figure A-14. RS-232C Interface Circuit Card Location

The RS-232C Interface option will only work with instruments that have D revision letter, or greater, motherboards, and that have software revision 1.5 or greater. The motherboard revision letter is located on the bottom side of the motherboard in the location shown in Figure A-15.

NOTE: D revision motherboards do not allow use of the 2100/2110's external START feature. Contact ESI if you have a D revision motherboard and want to use the external START feature.

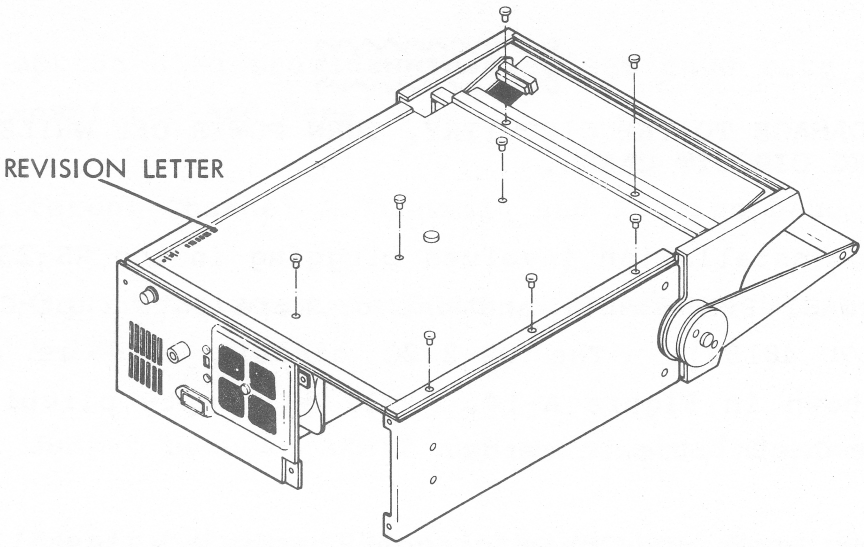

Figure A-15. Motherboard Revision Letter Location

To determine which revision of software is present in your instrument:

Push 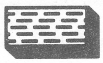 (yellow key) 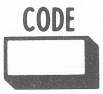

The software revision number will appear at the bottom portion of the CRT screen.

A.3.9 RS-232C Interface Programming

The process of using the RS-232C Interface's Channel B can be conveniently split into two phases:

Instrument Setup
Result Accumulation

A.3.9.1 Instrument Setup

The VideoBridge continuously checks for input from the RS-232C bus as it takes measurements or waits for input. If RS-232C input is available, the instrument keyboard is disconnected and the RS-232C bus (Channel B) is connected as the input device. Characters are received from the RS-232C bus as ASCII character strings and submitted to the 2100/2110 in the same manner as strings from the keyboard. In other words, transmitting the string:

5 -5 1 BIN# <CR> <LF>

over the RS-232C bus (Channel B) will be like performing the same operation at the 2100/2110 keyboard. The key to programming is that the string submitted over the RS-232C bus (Channel B) must be exactly what appears on the screen when the 2100/2110 keys are pushed (see Table A-7). For example, when the mV button is pushed, MILLIVOLTS appears on the screen in the operator communication area. It is always what appears on the screen and not what appears on the keyboard which must be transmitted over the RS-232C bus.

Table A-7. Model 2100/2110 Remote Setup Dictionary

KEYBOARD COMMANDS	RS-232C PROGRAMMING COMMANDS	DESCRIPTION
MEASUREMENT CONTROLS		
SGL	SINGLE	Single Measurement Mode
CONT	CONTINUOUS	Continuous Measurement Mode
SER	SERIES	Series Equivalent Circuit
PRL	PARALLEL	Parallel Equivalent Circuit
CAL	CALIBRATE	Zero Correction (test leads/fixture)
HOLD	HOLD	Range Hold
AUTO	AUTO	Autorange
DISPLAY CONTROLS		
XCHG	EXCHANGE	Function Exchange (on CRT)
STAT	STATUS	Status (limits) Display
SORT	SORT	Enter Sorting Mode
DEV	DEVIATION	Deviation Display (top function only)
DIR	DIRECT	Direct Display (normal operation)
IMPEDANCE FUNCTIONS		
Q	Q	Quality Factor Measurement Function
D	D	Dissipation Factor Measurement Function
G/R	G/R	Conductance (G)/Resistance (R) Measurement Function
C	C	Capacitance Measurement Function
L	L	Inductance Measurement Function
Y/Z	Y/Z	Admittance (Y)/Impedance (Z) Measurement Function
B/X	B/X	Susceptance (B)/Reactance (X) Measurement Function
DEL	RUB OUT (on keyboard)	Delete the last character entered
ENTER	SPACE BAR (on keyboard)	Spacing device when programming
CASSETTE FUNCTIONS		
LOAD	LOAD-FILE	Load Programs via Cassette Tape
SAVE	SAVE-FILE	Save Programs On Cassette Tape
DEVIATION AND LIMITS FUNCTIONS		
BIN#	BIN#	Bin Number Entry
MINOR	MINOR	Minor Number or Maximum/Minimum Reject Entry
%	%MODE	Percent (deviation) Mode
ABS	ABSMODE	Absolute (deviation) Mode
NOM	NOMINAL	Nominal Value Entry

Table A-7. Model 2100/2110 Remote Setup Dictionary (Continued)

KEYBOARD COMMANDS	RS-232C PROGRAMMING COMMANDS	DESCRIPTION
TEST FREQUENCY AND LEVEL		
Hz	HZ	Test Frequency Entry
mV	MILLIVOLTS	Test Voltage (signal level) Entry
mA	MILLIAMPS	Test Current (signal level) Entry
MEASUREMENT TIME		
SETL	MS-SETTLING-TIME	Settling Time Entry
I.T.	INTEGRATION-TIME	Integration Time Entry
AVG	SAMPLES-AVERAGED	Average Measurements Entry
FAST	FAST	Fast Measurement Speed
MED	MEDIUM	Medium Measurement Speed
SLOW	SLOW	Slow Measurement Speed
NUMERICAL PREFIXES		
m	MILLI	Milli 10^{-3}
k	KILO	Kilo 10^{3}
M	MEGA	Mega 10^{6}
p	PICO	Pico 10^{-12}
n	NANO	Nano 10^{-9}
µ	MICRO	Micro 10^{-6}
SPECIAL FUNCTIONS		
CODE	CODE	Extra Functions Entry
	REMOTE[	Temporarily Disconnect the Keyboard and Start switch (start of setup)
	]	Re-activate the Keyboard and Start-switch at the end of setup unless the LOCK command was part of the setup
	REMOTEON	Measurement Results into RS-232C Buffer
	REMOTEOFF	No Measurement Output
	LOCK	Keyboard Lock Out
	UNLOCK	Re-activate the Keyboard
	SCREENOFF	Display Lock Out
	SCREENON	Enable CRT display

The RS-232C Channel B input is not echoed on the screen and carriage returns <CR> are necessary, line feeds <LF> are optional. With the exception of "REMOTE[" and "]", multiple commands can appear on the same line.

To allow fastest setup times and also to ensure that the RS-232C input will not be disturbed by keyboard input between successive lines of setup information, the first character output (instruction in the program) should be:

"REMOTE["

which temporarily disconnects the keyboard and external START switch. This character must be entered on a line by itself followed by a carriage return before additional input will be accepted by the 2100/2110.

The "]" character is issued at the end of the setup phase to restore the instrument to its measurement loop and make the keyboard active again. "]" automatically transmits error information. The setup program must explicitly lock the keyboard out if that is desired. This may be done with the LOCK command. After the desired measurements have been made, the instrument can be UNLOCKed.

If an error occurs as the 2100/2110 processes the setup information, it will be indicated by "]" at the end of the setup phase. In the case of multiple errors, only the last error will be indicated.
Example:

UNDEFINED ARGH!

In this example, "ARGH!" was unknown when the 2100/2110's dictionary was searched. It may also be helpful if the controller prints each string on its operator console as it transmits it to the 2100/2110, and then prints the error string received from the 2100/2110. This will greatly facilitate the development of setup programs.

Example Setup:

```
REMOTE[
  REMOTEON              % MEASUREMENT RESULTS INTO RS-232C BUFFER
  SCREENOFF             % LOCK OUT CRT DISPLAY
  LOCK                  % LOCK OUT THE KEYBOARD
  1000 HZ               % SET FREQUENCY
  FAST                  % SET AVERAGES, INTEGRATION TIME AND
                        % SETTLING TIME
  C D                   % MEASUREMENT FUNCTIONS
  SERIES                % SERIES EQUIVALENT CIRCUIT
  2 CODE                % SET ALL BINS TO ZERO
  1 -1 1 BIN#
  5 -5 2 BIN#
  10 -10 3 BIN#
  20 -20 4 BIN#         % SET UP BIN VALUES
  100 NANO NOMINAL      % NOMINAL VALUE
  .0005 MINOR           % SET MINOR REJECT VALUE
]                       % END OF SETUP
  SINGLE                % REQUEST FIRST READING
```

SETUP COMMENTS

The percent sign (%) is used to separate comments from the information which is to be acted upon by the 2100/2110. Therefore, comments can be included with the setup information as shown in the preceeding example.

SEPARATORS

All numbers and words in the setup strings must be separated by either SPACES, TABS, or be followed by a CARRIAGE RETURN.

LINE TERMINATION

Line feeds are accepted and discarded. A carriage return is all that is required.

UPPER AND LOWER CASE

Lower case characters are equivalent to upper case characters when naming definitions in the dictionary. When in doubt, use upper case characters. Comments can be either upper or lower case characters.

ERRORS DURING SETUP

Any errors occurring during the remote setup will be displayed as an english description of the error plus, in the case of undefined words, the offending word. This information becomes available after the "]" is processed by the instrument. If the setup went well the string "NO ERRORS" will be transmitted. In the case of multiple errors only the last will be transmitted.

DATA OVERFLOW

Data flowing into the RS-232C Interface option is placed in an intermediate queue, on an interrupt basis, allowing up to 256 characters of input to back-up before overflow occurs. This technique allows full lines of data to be transmitted without concern about lost data.

If the serial device fails to interpret control S as a request to terminate transmission, the input queue will overrun and information will be lost.

Once the queue is full, RS-232C Channel B responses to additional input are disallowed until the queue is one-quarter full.

Data overflow will result in a "hung" bus and should be considered carefully if several instruments require prompt service. One may always construct the setup in multiple phases of less than 256 characters each and then wait for phase completion before transmission of the next phase.

SETUP CAUTIONS

During the setup phase it is convenient to issue a STATUS command so the process of bin setup is visible on the screen. Remember that when the setup is complete STATUS must be issued again to put the instrument in the measurement mode. Otherwise the SINGLE measurement commands will not result in the transmission of measurement data to the remote device.

In summary, the procedure for remote setup is:

STEP 1. Sit down with a pad of paper and write what appears on the screen as you push the keys and manually set up the instrument.

STEP 2. Add "REMOTE[" to the start of this list of words and "]" to the end. Be sure that these two entries are each entered on a separate line apart from the other entries.

STEP 3. Write a program, in the language of the computer which will be setting up the 2100/2110, which outputs this list of words to the remote programming device.

STEP 4. After the list has been transmitted, request an output from the 2100/2110 (take one reading) and make certain no errors are encountered.

A.3.9.2 Result Accumulation

Special Display Words

Here, the word display is used to indicate some form of output. One form is the top and bottom display on the instrument screen - the one formed in large characters. Another is the more standard floating point numbers which are output to the remote device after a SINGLE command has been remotely issued. The conversion of an inner floating point representation to a string of characters suitable for display takes considerable processing time. The following words were devised so the time between measurements can be as brief as possible.

SCREENON/SCREENOFF

This pair of words enables and disables the large video display on the screen of the 2100/2110. When the instrument is not being monitored on site and the measurement results are being transmitted by way of the remote output, SCREENOFF will greatly increase measurement speed.

REMOTEON/REMOTEOFF

REMOTEON must be part of the setup information before the results of a measurement are transmitted to the remote device which last transmitted information to the 2100/2110. The output string looks like this:

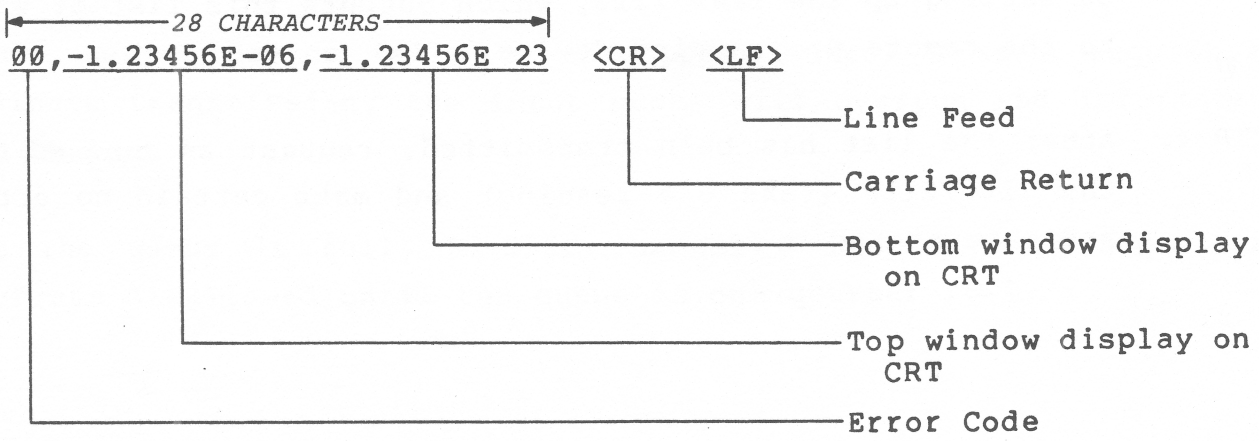

The field sizes are fixed so FORTRAN programs can use fixed field format statements to receive the input.

LOCK/UNLOCK

LOCK is issued in the setup phase to lock out the keyboard of the instrument during remote operation. UNLOCK can be issued at the termination of a run to restore control, or the keyboard can be unlocked by using pin 21 of the Handler Interface circuit card in case one wishes to override the remote device.

REMOTE[/]

REMOTE[disables the 2100/2110 keyboard and directs error messages normally appearing in the bottom reverse video line of the 2100/2110 to the remote device. It also disables the instrument from taking measurements during the setup phase. It is absolutely necessary that this word appear on a line by itself!

"]" restores the instrument to measurement mode and, if the setup didn't lock out the keyboard, re-enables the keyboard, and generally undoes any change made by REMOTE[. "]" also must appear on a line by itself!

Error code assignments for 2100/2110.

00	No error
01	Unused
02	Stack Empty
03	Stack Full
04	Syntax Error
05	Dictionary Full
06	Compiler Buffer Full
07	Vocabulary Stack Full
08	Vocabulary Stack Full
09	Loop Stack Empty
10	Loop Stack Full
11	Undefined Word
12	Ram Space Full
13	Open File Error (CPM only)
14	Bad Filename (CPM only)
15	Unused
16	Block Error (Tape I/O)
17	Unused
18	End of File Encountered
19	Unused
20	Floating Point Overflow
21	Floating Point Underflow
22	Float -> Fix error - Number too big
23	Unused
24	Unused
25	Float -> Double Precision Fix error - number too big
26	Unused
27	Input overloaded
28	Can't supply volts
29	Can't supply current

A.3.10 Calibration

The 2100/2110 needs no adjustment, other than normal calibration, when the RS-232C option is installed. The RS-232C Interface circuit assembly contains no service adjustments.

WARNING

TO AVOID PERSONAL INJURY FROM ELECTRIC SHOCK DO NOT REMOVE INSTRUMENT COVERS OR PERFORM ANY MAINTENANCE OTHER THAN DESCRIBED IN THIS INSTRUCTION SHEET. INSTALLATION AND MAINTENANCE PROCEDURES DESCRIBED IN THIS INSTRUCTION SHEET ARE TO BE PERFORMED BY QUALIFIED SERVICE PERSONNEL ONLY.

WARRANTY OF TRACEABILITY

The reference standards of measurement of Electro Scientific Industries, Inc., are compared with the U.S. National Standards through frequent tests by the U.S. National Bureau of Standards. The ESI working standards and testing apparatus used are calibrated against the reference standards in a rigorously maintained program of measurement control.

The manufacture and final calibration of all ESI instruments are controlled by the use of ESI reference and working standards and testing apparatus in accordance with established procedures and with documented results. (Reference MIL-C 45662)

Final calibration of this instrument was performed with reference to the mean values of the ESI reference standards or to ratio devices that were verified at the time and place of use.

DISCLAIMER OF IMPLIED WARRANTIES

THE FOREGOING WARRANTY OF ESI® IS IN LIEU OF ALL OTHER WARRANTIES, EXPRESS OR IMPLIED. ESI SPECIFICALLY DISCLAIMS ANY IMPLIED WARRANTIES OR MERCHANTABILITY OR FITNESS FOR A PARTICULAR PURPOSE. In no event will ESI be liable for special or consequential damages. Purchaser's sole and exclusive remedy in the event any item fails to comply with the foregoing express warranty of ESI shall be to return the item to ESI, shipping charges prepaid, and at the option of ESI obtain a replacement item or a refund of the purchase price.

esi, Part No 1866 9/80

Electro Scientific Industries, Inc.

13900 N.W. Science Park Drive • Portland, Oregon 97229 • Telephone: (503) 641-4141 • Telex: 15-1246

WARRANTY OF QUALITY

Electro Scientific Industries, Inc., warrants its products to be free from defects in material and workmanship. Rigorous quality control permits the following standard warranties:

1. Two years for components and instruments utilizing passive circuitry. One year on repairs of out-of-warranty items.
2. One year on components and instruments utilizing active circuitry as identified in the price list. Six months on repair of out-of-warranty items.

During the in-warranty periods, we will service or, at our option, replace any device that fails in normal use to meet its published specifications. Batteries, tubes and relays that have given normal service are excepted. Special systems will have warranty periods as listed in their quotation.

DISCLAIMER OF IMPLIED WARRANTIES

THE FOREGOING WARRANTY OF ESI® IS IN LIEU OF ALL OTHER WARRANTIES, EXPRESS OR IMPLIED. ESI SPECIFICALLY DISCLAIMS ANY IMPLIED WARRANTIES OR MERCHANTABILITY OR FITNESS FOR A PARTICULAR PURPOSE. In no event will ESI be liable for special or consequential damages. Purchaser's sole and exclusive remedy in the event any item fails to comply with the foregoing express warranty of ESI shall be to return the item to ESI, shipping charges prepaid, and at the option of ESI obtain a replacement item or a refund of the purchase price.

esi® Part No. 1867 9/80

Electro Scientific Industries, Inc

13900 N.W. Science Park Drive • Portland, Oregon 97229 • Telephone: (503) 641-4141 • Telex: 15-1246